Multilizer PDF Translator Free version - translation is limited to ~ 3 pages per translation.

7,1. C:24AB2>4CAB@58N 594>4Q 15A@2KE

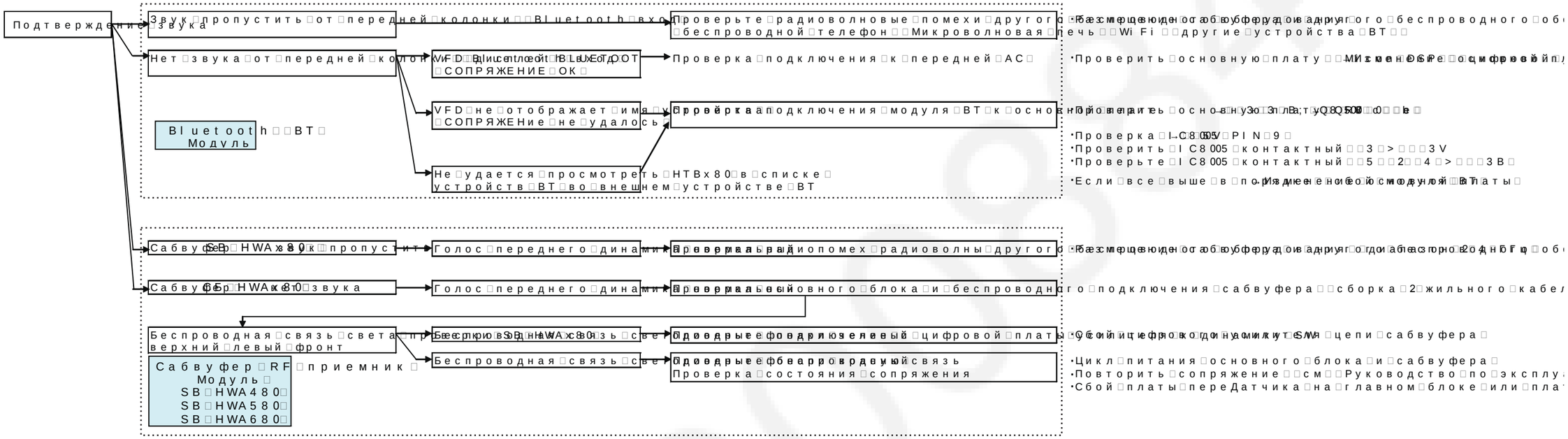

Multilizer PDF Translator Free version - translation is limited to ~ 3 pages per translation.