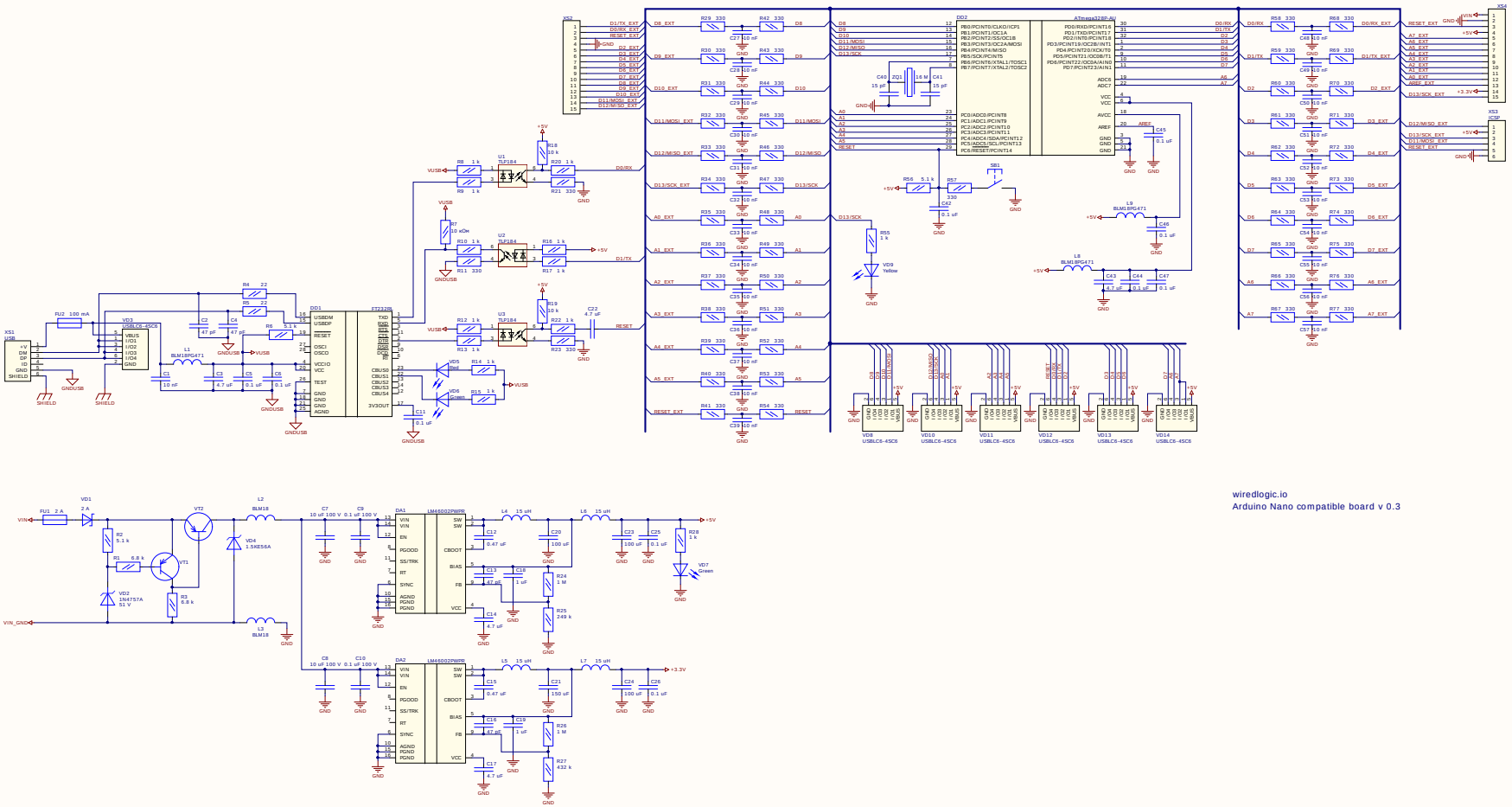

wiredlogic.io
Arduino Nano compatible board v 0.3