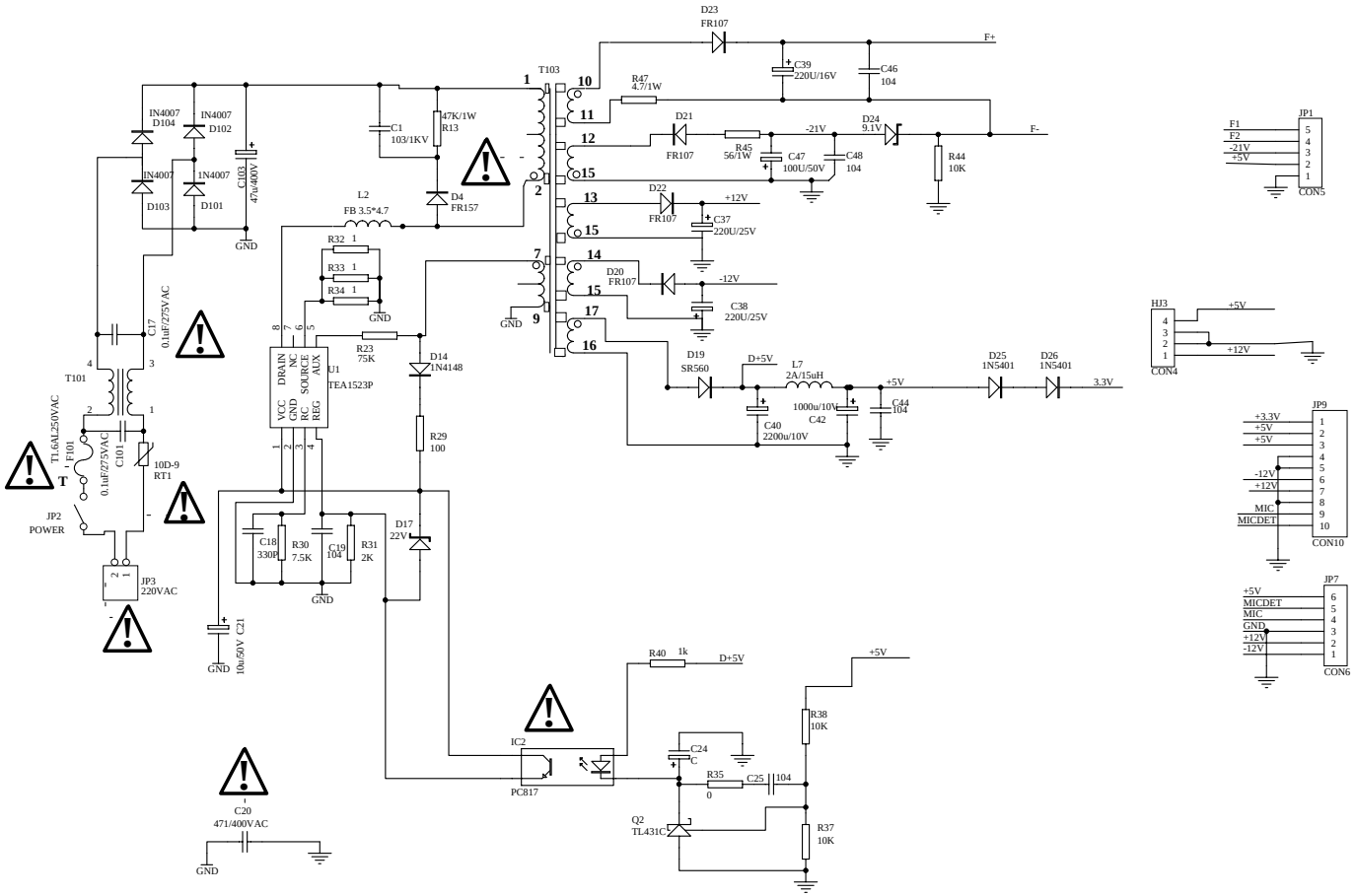

EDY1523B	EBD3.380.018DL		
	1	1	

EBD3.380.018DL