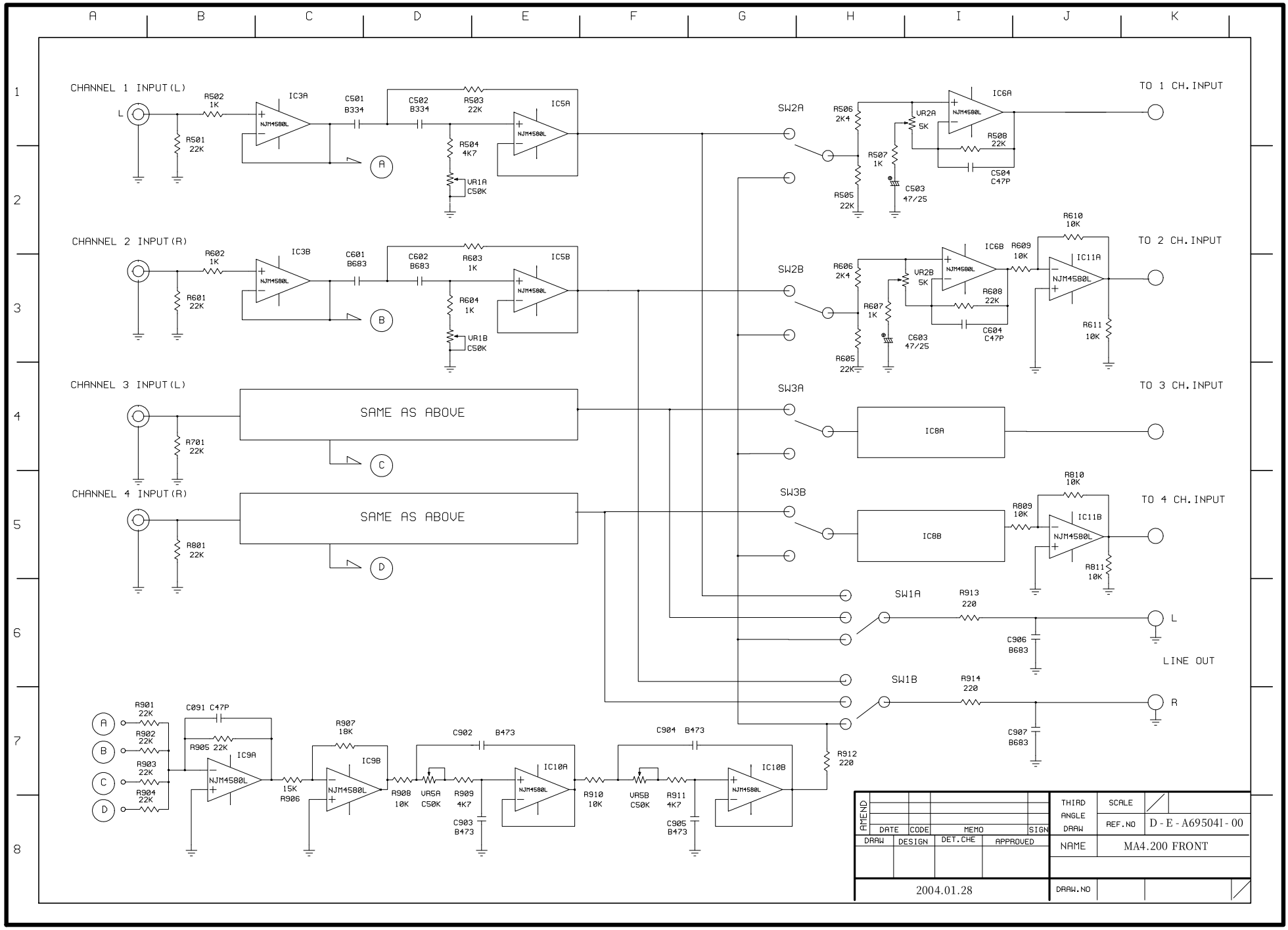
CHANNEL 1 INPUT(L)
CHANNEL 2 INPUT(R)
CHANNEL 3 INPUT(L)
CHANNEL 4 INPUT(R)
SAME AS ABOVE
SAME AS ABOVE
TO 1 CH.INPUT
TO 2 CH.INPUT
TO 3 CH.INPUT
TO 4 CH.INPUT
LINE OUT
SW2A
SW2B
SW3A
SW3B
SW1A
SW1B
IC3A
IC3B
IC5A
IC5B
IC6A
IC6B
IC11A
IC11B
IC8A
IC8B
IC9A
IC9B
IC10A
IC10B
NJM4580L
R502 1K
R501 22K
C501 B334
C502 B334
R503 22K
R504 4K7
VR1A C50K
R602 1K
R601 22K
C601 B683
C602 B683
R603 1K
R604 1K
VR1B C50K
R701 22K
R801 22K
R506 2K4
R507 1K
R505 22K
VR2A 5K
R508 22K
C504 C47P
C503 47/25
R606 2K4
R607 1K
R605 22K
VR2B 5K
R608 22K
C604 C47P
C603 47/25
R609 10K
R610 10K
R611 10K
R809 10K
R810 10K
R811 10K
R913 220
R914 220
C906 B683
C907 B683
R912 220
R901 22K
R902 22K
R903 22K
R904 22K
C091 C47P
R905 22K
R907 18K
15K R906
C902 B473
R908 10K
VR5A C50K
R909 4K7
C903 B473
C904 B473
R910 10K
VR5B C50K
R911 4K7
C905 B473
AMEND
DATE
CODE
MEMO
SIGN
DRAW
DESIGN
DET.CHE
APPROVED
THIRD ANGLE DRAW
SCALE
REF.NO
D - E - A69504I - 00
NAME
MA4.200 FRONT
2004.01.28
DRAW.NO