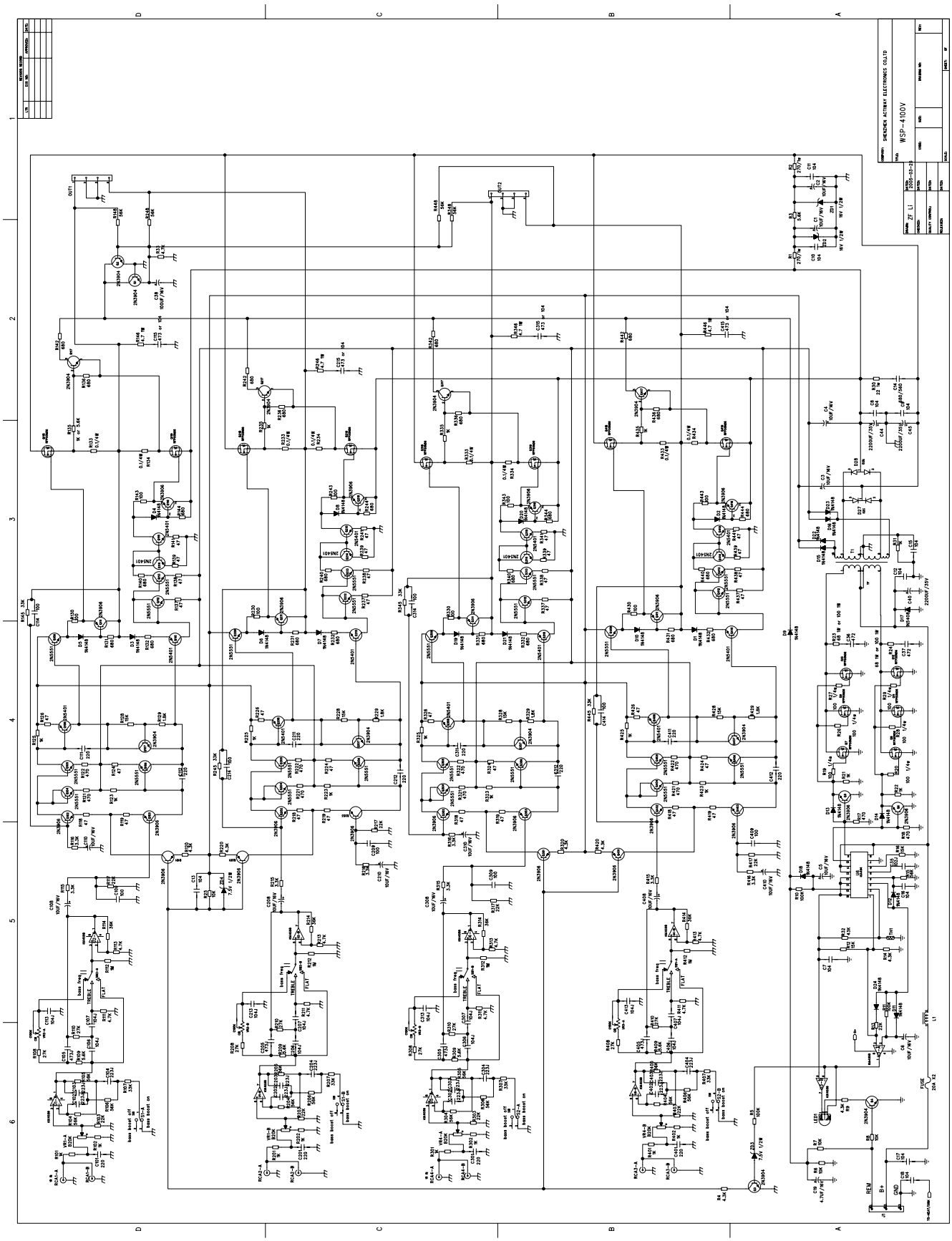
SHENZHEN ACTWAY ELECTRONICS CO.LTD
WSP-4100V
2006-3-29
bass boost off
bass boost on
TREBLE
FLAT
bass freq
REM
B+
GND
FUSE
20A X2